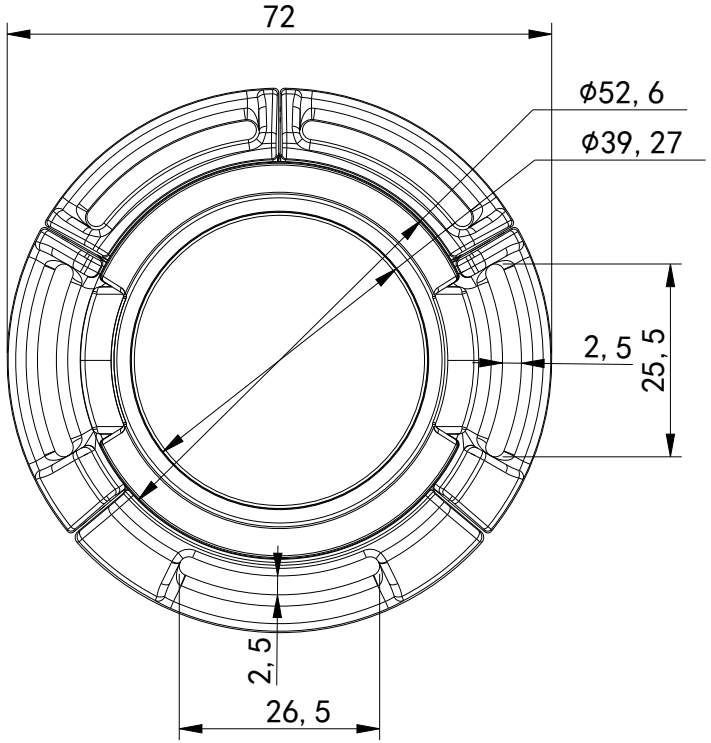

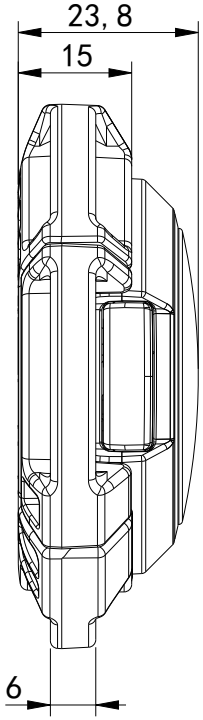

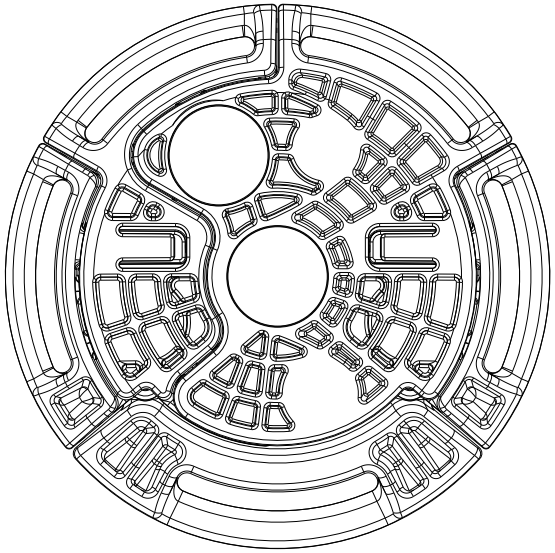

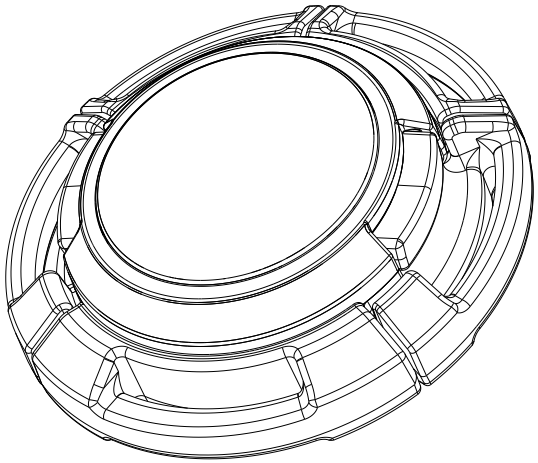

applicable model: X5SC, X5SD, X5SG, X5SH.

LianYang Plastic(Shen Zhen)Co.Ltd

GENERAL TOLERANC: 0.0 ± 0.1 0.00 ± 0.05 ANGULAR ± 0.5° GENERAL RADIUS:0.5 GENERAL CHAMFER: 0.5 GERENAL DRAFT: 1°	DESIGN	Mr Zeng	DATE	2023.10.23	FILE NAME	X5SC.D.G.H
	CHECKED	Mr Li	DATE		PARTS NAME	MD
	APPROVAL		DATE		MATERIAL	
	PROJECTION		SCALE: 1: 1	UNIT: MM	SHEET	1 OF 1